XMT*JK four-way temperature controller

Instruction manual

Ⅰ、Summary

XMT*JK four-way temperature controller can connect four sensors synchronously and conveniently, diminish the instrument's volume. It has a separate auto-tune mode and PID parameter function with more precision and more reliability in whole machine control.

Ⅱ、Primary technical standard:

1、Input signal: CU50（-50.0～150.0℃）、Pt100（-19.9～600.0℃）、K（0～1300℃）、E（0～700.0℃）、J（0～900.0℃）

2、Accuracy: ±0.5%F.S±1byte

3、Output method: relay AC220V 3A(resistance load)

4、control mode: difference control-on/off and PID control

5、Input power: AC85~242V 50/60Hz

6、Environment Temperature: 0 to 50℃, Humidity: ≤85%RH

7、Face Size: 160×80×110 mm Hole Size : 152×76 mm

96×96×110 mm Hole Size : 92×92 mm

72×72×110 mm Hole Size :68×68 mm

Ⅲ、Panel board instruction(consult)

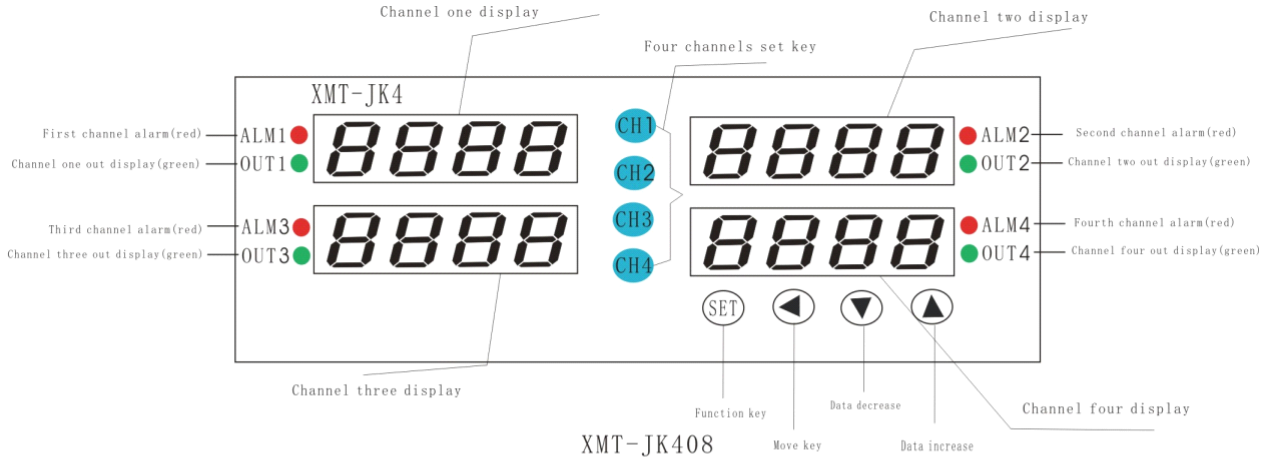

XMT-JK408

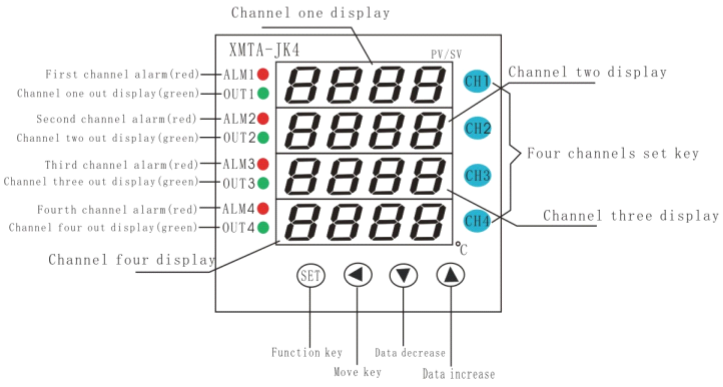

XMTA-JK408

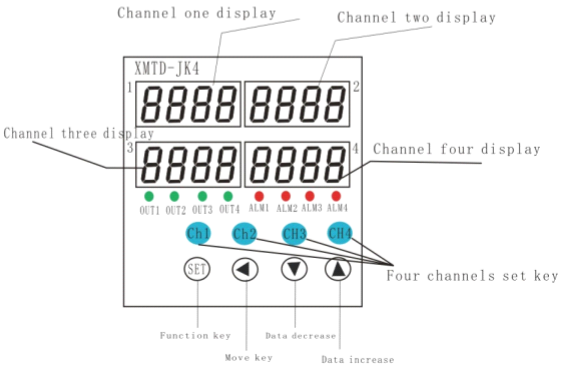

XMTD-JK408

Ⅳ、connection scheme(consult)

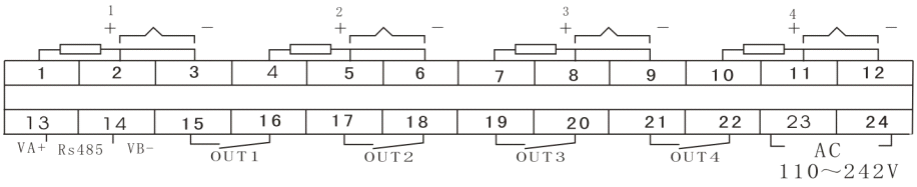

XMT-JK408

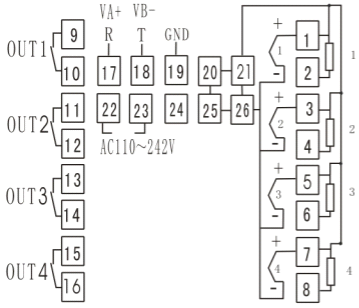

XMTA-JK408

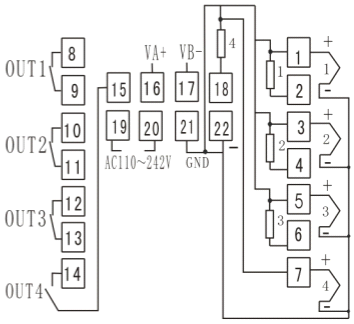

XMTD-JK408

connection indicator :

PS：1、MiNi printer connection

Printer down-lead no	Meter port
21	R
19	T
10-18	GND
others	None

2、RS485 communication:connect corresponding ‘VA+,VB-’.

3、RS232 communication:connect corresponding ‘R’、‘T’、‘GND’.

4、only one function can be used between printer and communication functions at one time.

Notice: The meter's signal input used to isolate type sensor, or that may affect the meter's measurement.

Ⅴ、Code setting mode

Series		Code	Name	Setting range	Manual	Remarks
First Menu	0	LOCK	Code lock	0～50	18-all the parameter can be revised,	18
	1	Sn	Input type	0～4	CU50、Pt100、K、E、J	K
	2 *	ALP	Alarm define	0～6	0: no alarm、1: upper limit alarm、2: low limit alarm、3: upper warp alarm、4: low warp alarm、5: between besides alarm、6: between inside alarm	1
	3	t	Output cycle	0～120 S	relay control action cycle setting	10 S
	4	dp	display accuracy	0~1	0. no decimal; 1.have decimal	0
	5	P-SH	Upper limit	P-SL ～ full range	this parameter resreict enactment value’s upper	according request

	6	P-SL	lower limit	Range jumping-off ～P-SH	this parameter resreict enactment value's low	according request
	7	OPB	Assistant output method	0~2	0. no Assistant output; 1.RS485 communication 2.Mini pinter	0
	8	Add	address	1～64 （1～9999 分）	Meter's NO (in minitype as print times)	1
	9	bt	baud rate	——	0：1200； 1：2400； 3：4800； 4：9600	9600
Second Menu	10	SP ＋ N(1~4)	N channels control setting	Range by P-SL、P-SH decide	Control value setting	default
	11	AL＋N	Alarm value setting	Range by P-SL、P-SH decide	Output mode decide by 'AL-P'	default
	12	SC＋N	Sensor error amendment	±20.0	The sensor have deviation can use item to revisal	0
	13	P＋N	Proportion modulus	0～100	When the P increase, the proportion function decrease. **When P=0,the meter is ON/OFF control**	8
	14	I＋N	Integral time	0～3000	Set integral time so as to unchain residual. Deflection caused by proportion control. To increase it, the static difference will be reduced, but when it is too high ,the static difference will drift instability.	240
	15	d＋N	differential time	0～200S	Set the differential time，so as to avoid. The output's fluctuation,Improve the control's stability.	30
	16	Hy＋N	Main control by drop in level	0.1～50.0	—	1.0
	17*	At＋N	Setting itself	0~1	0：close setting itself function 1：open setting inself function	0

Ⅵ、Technical indexes

1. Accurately connect uires according as connect indicator,power on.
2. Press 'SET key' for 3 seconds,enter into first menu.then 'parameter 'and paraneter value tims will be shown respectively about 'CH1 window' and 'CH2 window',you can adjust these parameters by poressing '▲'、'▼'、'◀'、and save the setting by prwss 'SET key ',every parameter should be saved after setting ,then enter next parameter set.

3. You can press ‘CH1’、‘CH2’、‘CH3’、‘CH4’ for 3 seconds to enter into corrseponding channel menu .After finished one parameter set,press ‘SET’ to save it,then enter into next parameter set .

Ⅶ、Setting itself

The meter use in the first time or the surroundings have changer, finding it control not good, in this time you need use the setting itself. For example: Press the SET key enter into parameter setting, The first set the Hy is 0.5～1℃, set the AT=1,A-M light flickered, the meter enter into setting itself, if the output is relay set the t=2S, the meter have three times vibrate, automatic preserved P, I, D parameter and the A-M light off, the setting itself finish.

Ⅷ、Fault Analysis and Clearance

XMT*JK408 adopt advanced production process, and have the strict test before leaving factory, it improve the reliability of the meter .The usual fault caused by the wrong operation or parameter setting .If you find the fault couldn’t be cope with, please record it, and contact with the agent or us. Sheet 8-1 is the usual fault of XMT*JK408 in the daily application：

Sheet8-1 Common fault disposal

Fault symptom	Analysis of causes	Disposal measurement
Abnormal power	1、poor contact of power cord 2、power switch without lose	Check the power
Signal display do not correlate with the facts.（display ‘HH’ or ‘LL’）	1、Sensor model mismatch 2、wrong signal connect ion	1、check sensor model and meter interior input parameter 2、check signal wire
Abnormal control output	wrong connection of output wire	Check output connection

Remark：Our company will improve product technology, design and specification, it is confirm to the object.

Attached 1：Statement of meter’s parameter attention letter and English letter

A	B	C	D	E	F	G	H	I	J	K	L	M
A	b	C	d	E	F	G	H	I	J	K	L	n̄
N	O	P	Q	R	S	T	U	Y				
n	o	P	q	r	S	t	u	y				